Prowell Woodworks
800.466.1850

PO# 2545--Wallman.

Dated: Dec 19, 2025
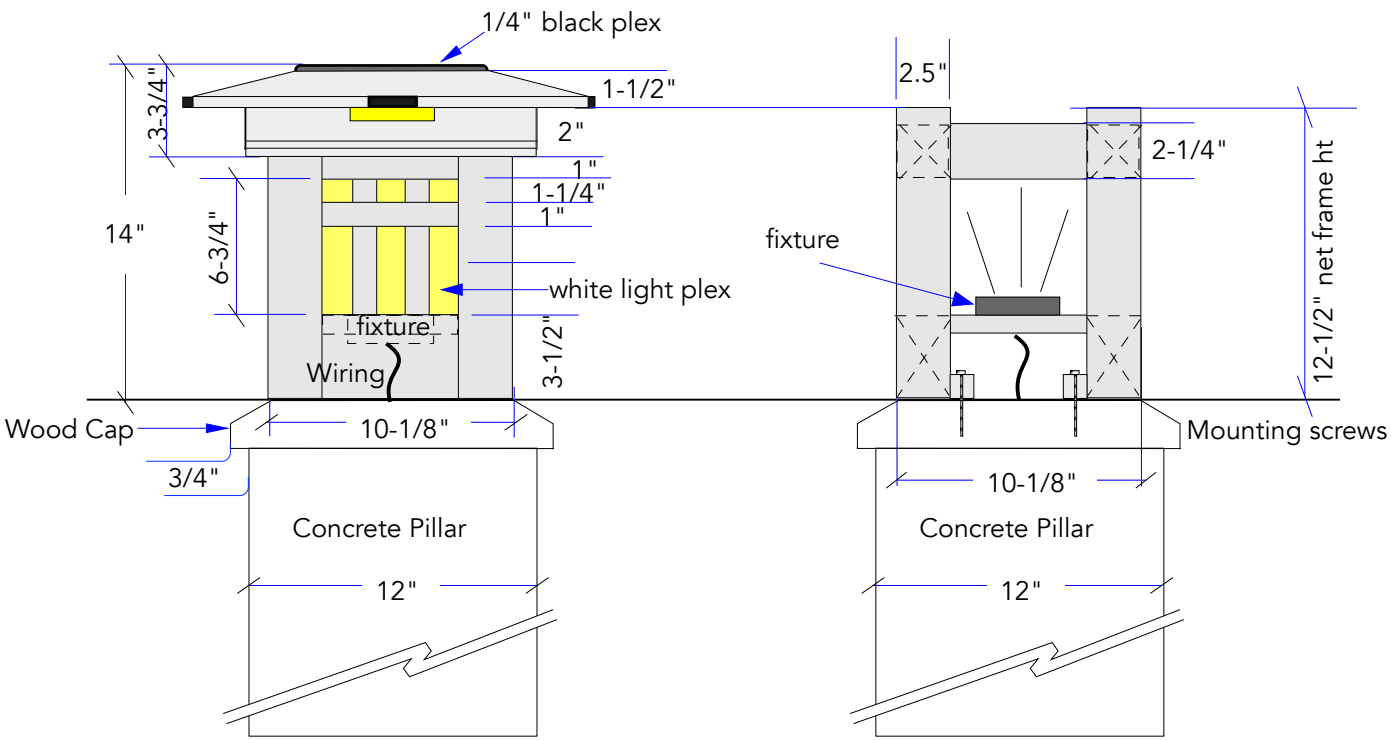
-Lighted Columns #16